Proceedings in MANUFACTURING SYSTEMS

Proceedings in Manufacturing Systems, Volume 8, Issue 4, 2013 ISSN 2067-9238

NUMERICAL EVALUATION OF RADIAL DEFORMATION OF MAIN SPINDLE BEARINGS

Emil UDUP[1], Claudiu-Florinel BÎŞU[2,*], Miron ZAPCIU[3]

[1)] Institute National of Physics and Nuclear Engineering - Horia Hulubei, Magurele, Ilfov, Romania
[2)] Lecturer, PhD, Machines and Systems of Production Department, University Politehnica of Bucharest, Bucharest, Romania
[3)] Professor, PhD, Machines and Systems of Production Department, University Politehnica of Bucharest, Bucharest, Romania

Abstract: *The paper presents a study on the heat generated by the bearings of a certain type of main spindle assembly, along with the influence of the generated temperature on the Z-Y radial deformations employing numerical simulations as per the finite element method. Moreover, the mentioned numerical simulations have also been subsequently extended to the spindle assembly outfitted with a cooling system on the ball bearing location under the housing. The maximum temperature recorded by numerical simulations on the rear bearing was 51.2 ºC while the temperature on the front bearing was 48.7 ºC. After having inserted the cooling system, the on the rear bearing temperature decreased to 20.4ºC and on the front bearing the temperature decreased to 23.4 ºC. Besides, the radial deformation caused by the increase of temperature was 3 µm at a maximum temperature of 23.4 ºC, and on the rear bearings it was 3.4 µm at a maximum temperature of 20.4 ^{0}C.*

Key words: *spindle, bearings, thermal distribution, radial deformation, radial clearance.*

1. INTRODUCTION

Machine-tools are the main assemblies used on a large scale in industry for the fabrication of machine components, industrial installations, gears. Function of the product to be obtained, the machine tools has different parameters which characterize them. The spindle-bearing mechanical assembly in a machine tool is subject to several mechanical and thermal loads during operation. The new developed technologies, the increased demand for finite products obtained by machine-tools have led to the design of some spindle assemblies characterized by high speeds, outfitted with new types of bearings, inverter systems, etc. The high cutting speeds generate heat, especially in bearings. Moreover, the dimensions of the spindle, the stiffness of the spindle and the axial and radial loading, all of them led to the distortion of the assembly during operation, mainly by overheating the assembly. Among other design criteria and details, the machine-tool building industry is particularly considering the management of the thermal phenomena that may induce errors in the machining process. It is very important to have a thermo-mechanical behavior prediction for machine-tool spindles in order to obtain a reliable operation of high speed machine tools. The performance of these speed spindles is dependent on their thermal behavior. Research works report thermal characterization on different type of spindle [1, 2]. The paper presents the mathematical calculations performed by the authors for the determination of the heat generated in the bearings of a spindle-assembly and the numerical simulation employing the finite element method for the heat transfer to the main components of the spindle assembly (i.e. bearings, shaft, housing) as well as the assessment of the radial deformation in bearings caused by the temperature increase. Thermal deformations significantly affect the characteristics (internal loads, stiffness) of the ball bearings and that is why they need to be considered in the predictive models of spindles [3, 4].

2. OBJECTIVE

The objective of this paper is represented a numerical model development for thermal behaviour concerning the evaluation of the internal clearance of the bearing spindle. Determining the optimal preload and the optimal radial and axial clearance provide a necessity in order to obtain a stable thermal behaviour of the spindle. During the operation of the spindle and more than that in the cutting process the thermal expansion of the angular bearing induce a decrease of the internal clearance of the bearing. Knowing the real value of the internal clearance is an important information for bearing mounting with and preloading.

3. MODEL DESCRIPTION

The spindle assembly subjected to the thermal evaluation is presented in Fig. 1 as a main spindle within the range of 0–6 000 RPM and 570 N preload, without a cooling system, while Fig. 2 presents the main spindle with helical water cooling circuits located inside the housing, in front of the ball bearings. The models of spindle assembly under study with the two cases (i.e. with and without cooling system) have been made using the parametric program Inventor Professional 2013, by Autodesk.

* Corresponding author: Splaiul Independentei 313, Sector 6, Bucharest, Romania, 060042
Tel.: +4021.402.9369;
E-mail addresses: *cfbisu@gmail.com* (C.F. Bîşu); *miron.zapciu@upb.ro* (M. Zapciu)

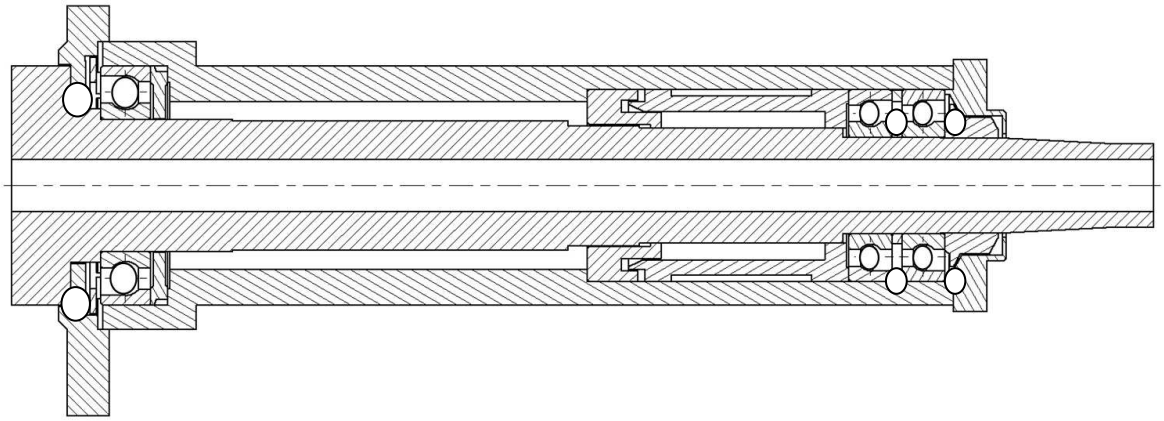

Fig. 1. Model 1 of a main spindle of a grinding machine used in finite element simulation.

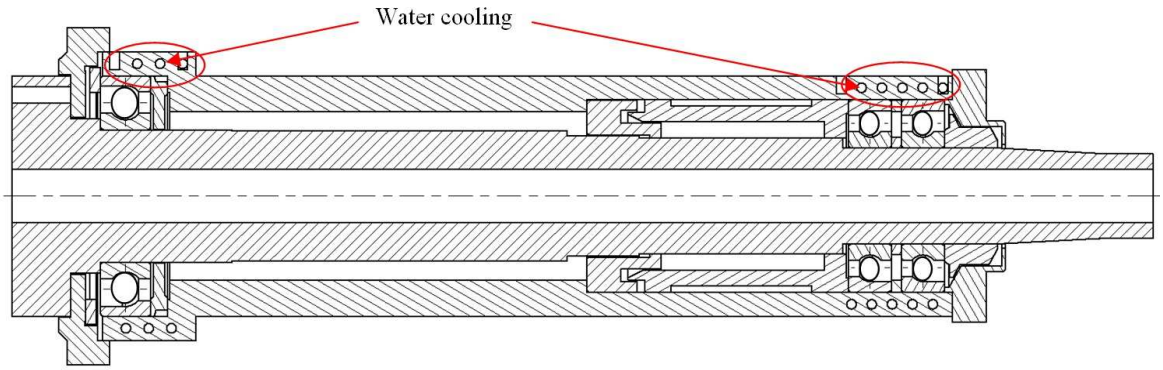

Fig. 2. Model 2 of a main spindle with helical water cooled channels.

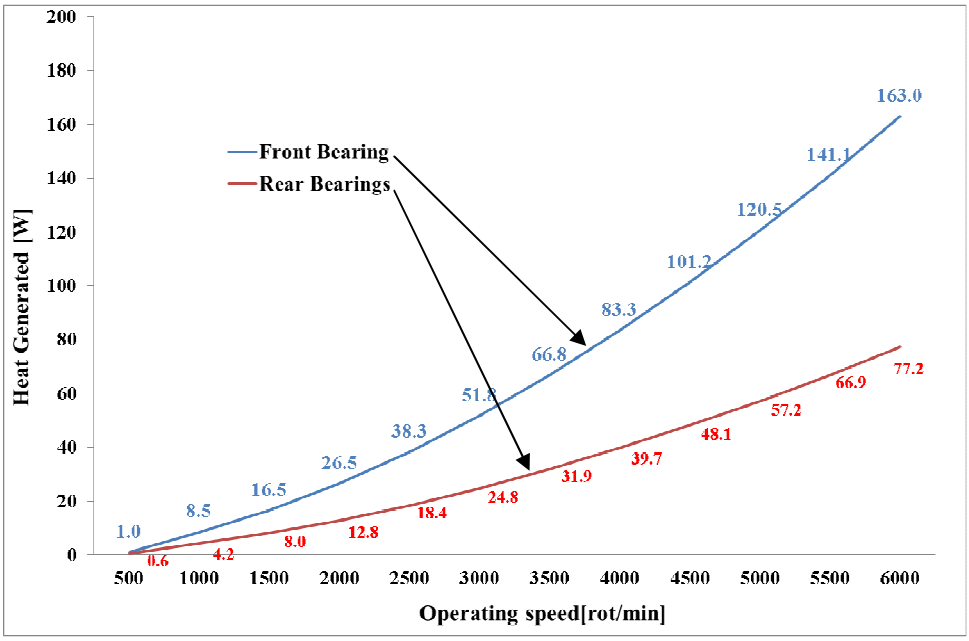

Fig. 3. Generated heat calculated depending on the operation speeds.

The accomplished model is being exported in step format and imported in ANSYS program to enable the analysis by simulation employing the finite element method. The cooling circuits are helical in shape and are located in the spindle assembly housing in front of the ball bearings with angular contact, and show the following characteristics: 4 mm water channel diameter; 55 mm average diameter of the propeller for circuit 1; 9.5 mm the helical propeller step for circuit 1; 45 mm the average diameter of the propeller for circuit 2 and 8.5 mm the helical propeller step for circuit 2. The heat is mainly generated at bearing raceways and balls due to the fric-

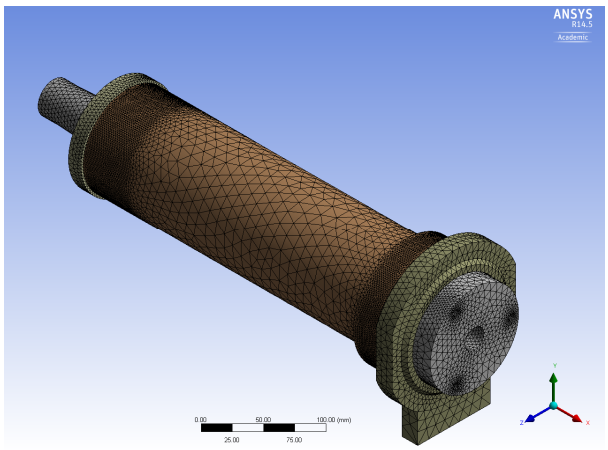

Fig. 4. Model meshed with tetrahedrons method.

tion influenced by speed, preload and lubricant; the bearing temperature distribution rises due to the heat generated by friction losses [5–8]. Figure 3 gives the heat generated in the spindle bearings in function of the operation speed. Heat generated in the main spindle assembly on the two bearings installed in a ”O” configuration is 163 W on the front bearing and 77.2 W, on the rear bearing.

4. NUMERICAL SIMULATION

The parametric models were used as input data and meshing using the finite element method, also applying the tetrahedrons method as illustrated in the Fig. 4. To obtain as accurate results as possible in respect of the temperature distribution on the main components of the assembly, a small size mesh was employed in the area of the bearings.

For the first thermal simulation the generated heat is applied on the contact area between the balls and the inner-outer ring in function of the operation speed. The 60 W/m^2 C forced convection is applied for the external surfaces of the spindle housing and for the internal surfaces of the spindle. For the second simulation, in addition to the first one, the following input data were also considered: V – cooling fluid flow velocity is 2 m/sec; T – water temperature at cooling circuit intake is 5 ºC; P – cooling fluid pressure at circuit outlet is 0 Pa. As regards the mechanical simulation to determine the radial deformations (on Y and Z direction) and the stress in the rear and front bearings, the input data consisted of the temperature distribution on each ball bearing function of the heat generated at a certain speed and the contact surface between bearings and shaft and the housing, respectively is fixed support.

5. RESULTS AND DISCUSSIONS

The numerical model used in thermal simulation with Ansys program in order to determining the temperature distribution on the housing in the right front and rear bearings was comparing with the experimental data measured with two thermocouple, Figs. 5 and 6. The numerical simulation in order to perform the temperature distribution was made on a grinding spindle that requires a high precision machining. Taking in to account the precision execution, which influences the accuracy of

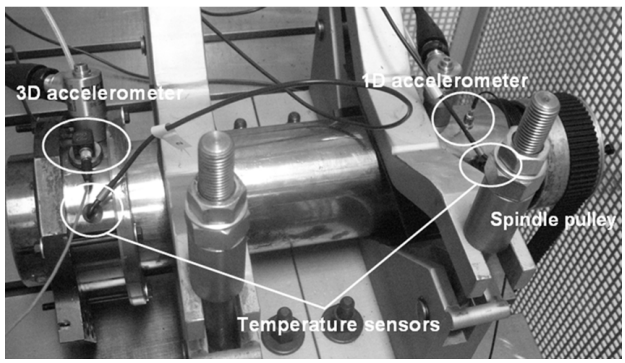

Fig. 5. Experimental setup.

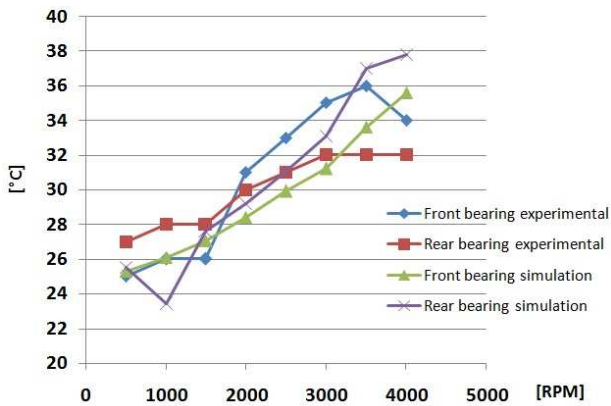

Fig. 6. Numerical simulation and experimental results.

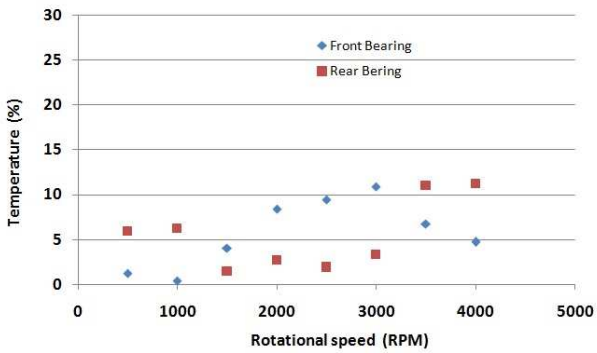

Fig. 7. Errors model between numerical simulations and experimental results.

operation, corresponding four accuracy classes of bearings, so: P0, P6, P5, P4. The P4 bearing class has the lower tolerances. The spindle is supported by one front bearing (B7211-C-T-P4S) and two rear bearings (B7208-C-T-P4S) mounted in “O” configuration. The bearings used in this study are P4 class, produced by FAG [9].

Before calculating the internal clearance of the bearings, the general model [8] is presented having maximum 11% residual errors (Fig. 7). The model is a linear one and all tests were performed in test rig conditions different from those on the grinder machine.

The results of the numerical thermal simulations regarding the temperature distributions in the spindle ball bearing assembly with and without a cooling system are presented in Fig.8 and Fig. 9 for a 4 500 RPM speed. So, it is found that the rear bearings are affected by a higher temperature in comparison with the front bearings. The maximum temperature recorded on the rear bearing at

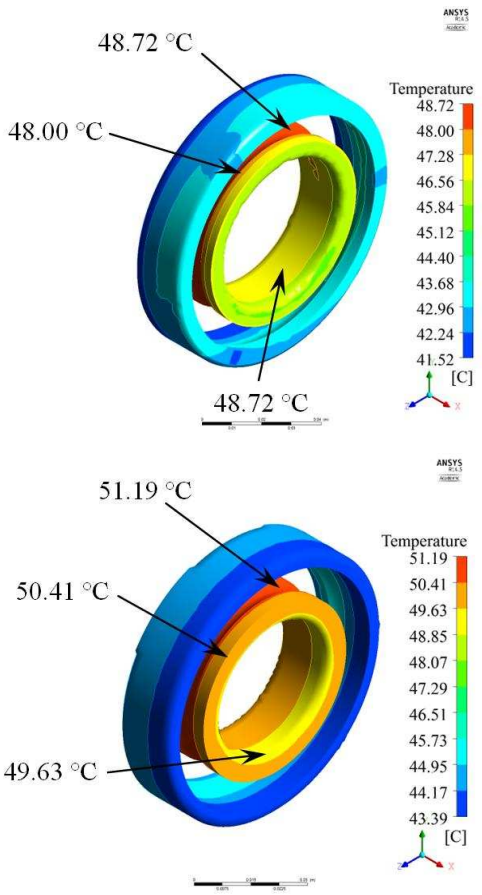

Fig. 8. Thermal distribution of the rear bearings (back-to-back arrangement) for the spindle without cooling.

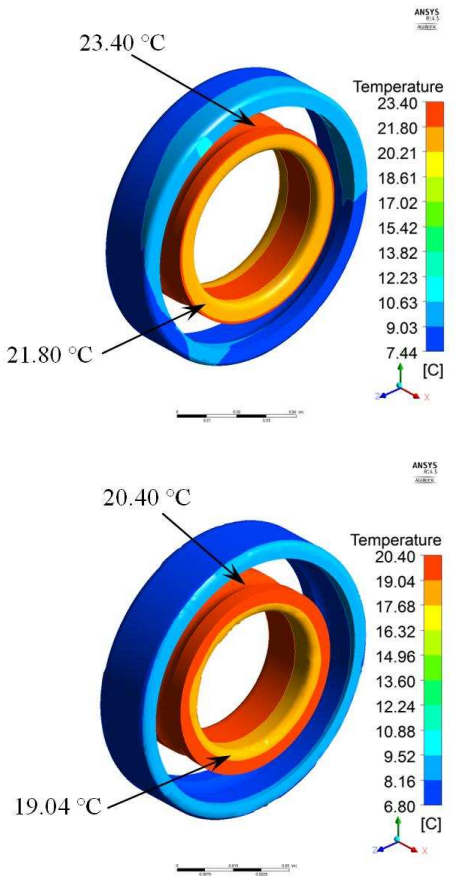

Fig. 9. Thermal distribution of the rear bearings (back-to-back arrangement) for the spindle with cooling.

4 500 RPM of the main spindle is 51.2 ºC, while on the front bearing at the same 4 500 RPM speed, the maximum temperature is 48.7 ºC. After having inserted the cooling system into the spindle housing, the rear bearing temperature decreases down to 20.4 ºC and on the front bearing, down to 23.4 ºC. It is obvious that the cooling system is more efficient on the rear bearing than the cooling system for the front bearing. The construction of the spindle assembly with cooling system provides a more efficient transfer of the heat generated on the rear bearings. The numerical mechanical simulations of the radial deformations for the rear and front bearings obtained with the thermal loads presented in Figs. 8 and 9 are presented in Figs. 10 and 11 for a water cooled spindle assembly.

So, it is found that the maximum radial deformation on *Y*, *Z* directions of the front bearing is 3 µm at a maximum temperature of 23.4 º C while for the rear bearings, the maximum radial deformation is 3.4 µm at a maximum temperature of 20.4 ºC. The maximum equivalent (von-Mises) stress resulted from simulations on the front bearing is 90 MPa and on the rear bearing it is 108 MPa, both results falling in the allowable resistance limit of 450 MPa (Figs. 12 and 13). In the Fig. 14, the radial deformation is presented on the direction *Z*, which represents half of the radial deformation. As seen, the radial deformation increases exponential with the spindle speed and temperature increasing. The maximum radial deformation reaches 3.28 µm for the front bearing and 3.5 µm for the rear bearings with a conventional speed 4500 rpm being in accordance with the technical bearing specification [9, 10 and [11]. For these bearings a 6 µm to 11 µm is the radial clearance obtained after the bearing mounting. Due to the thermal influence the internal clearance of the bearings will be reduced in the same way with the radial deformation generated by the thermal expansion of the bearing elements, thus obtaining around a 3 µm minimum internal radial clearance of the bearing.

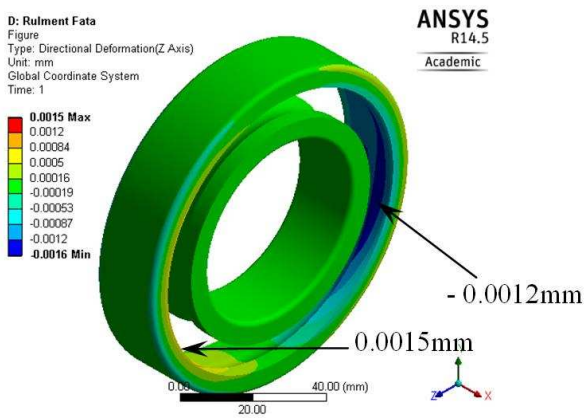

Fig. 10. Radial deformation *Y* and *Z* of the front bearing of the spindle with cooling.

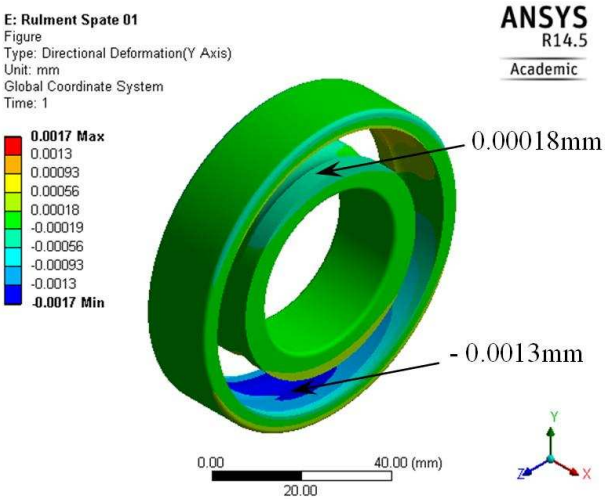

Fig. 11. Radial deformation *Y* and *Z* of the rear bearings of the spindle with cooling.

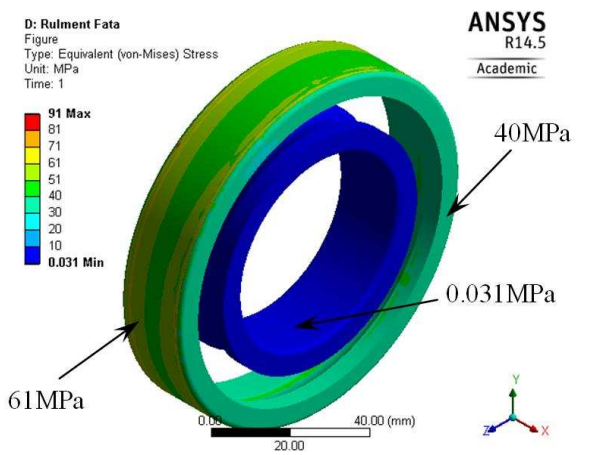

Fig.12. Equivalent (von-Mises) Stress of the front bearing for the spindle with cooling.

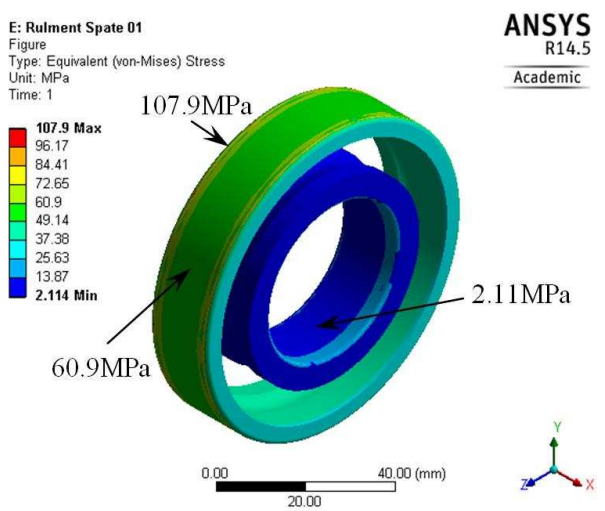

Fig. 13. Equivalent (von-Mises) Stress of the rear bearing for the spindle with cooling.

The interest of this study is to determine the influence of temperature on radial expansion, respectively radial deformation. The high accuracy of the cutting process and increase the bearing life requires thorough knowledge of thermodynamic phenomena occurring during technological processes.

Due to the thermal influence on the internal clearance of the bearings required dynamic analysis of bearings fault condition, Fig. 15. Due to the importance of the front bearing we are interested to checking its dynamic behavior using the fault coefficients given by bearings manufacturer [9]. This will take into account the following coefficients: BPFO (Ball Pass Frequency Outer ring) – 9.2663, BPFI (Ball Pass Frequency Inner ring) -6.7337, BSF (Ball Spin Frequency) – 2.9747, FTF (Fundamental Train Frequency) – 0.4209. Using the Synchronous Envelope Analysis (SEA) [12] could determine the fault condition of the front bearing and validate that the reduction of the bearing internal clearance has not led to early wear of the bearing.

6. CONCLUSIONS

The numerical simulations by the finite element method allowed the assessment and prediction on the heat generated by the balls as well as the heat transfer in the spindle assembly, on one side, and the radial deformations on *Y* and *Z* directions, on the other. Outfitting the spindle assembly with a cooling system results in the improvement of the heat transfer and further, to the decrease of the radial deformations. Given the numerical results of the model concerning the radial deformation of the bearing we can evidence that the internal clearance decreases with the speed. The residual internal clearance can be determined after the thermal expansion of the bearing. Given the high accuracy of the cutting process and the bearing life the development to predict the influence of temperature on the internal radial clearance of the bearing becomes absolutely necessary.

The numerical simulation of the spindle using a thermo-mechanical model aims at highlighting the various phenomena that occur during different machining processes. Also the model is intended as a numerical instrument for advanced design solution on spindle reconditioning.

REFRENCES

[1] B. Bossmanns, J.F.Tu, *Thermalmodel for high speed motorized spindles*, International Journal of Machine Tools and Manufacture, 39(9) (1999), pp. 1345–1366.

[2] B. Bossmanns, J.F.Tu, *A power flow model for high speed motorized spindles - heat generation characterization*, ASME Journal of Manufacturing Science and Engineering 123(3), (2001), pp. 494–505.

[3] Maeda Osamu, Cao Yuzhong, Y. Altintas, *Expert spindle design system*, International Journal of Machine Tools & Manufacture, 2005; 45, pp. 537–48.

[4] H. Li, Y.C, Shin, *Integrated dynamic thermo-mechanical modeling of high speed spindles*, part 1: model develop ment. Journal of Manufacturing Science and Engineering, Transactions of the ASME 2004;126:148–58.

[5] T.A. Harris, Rolling Bearing Analysis, 3and Edition, John Wiley and Sons. New York, 1991.

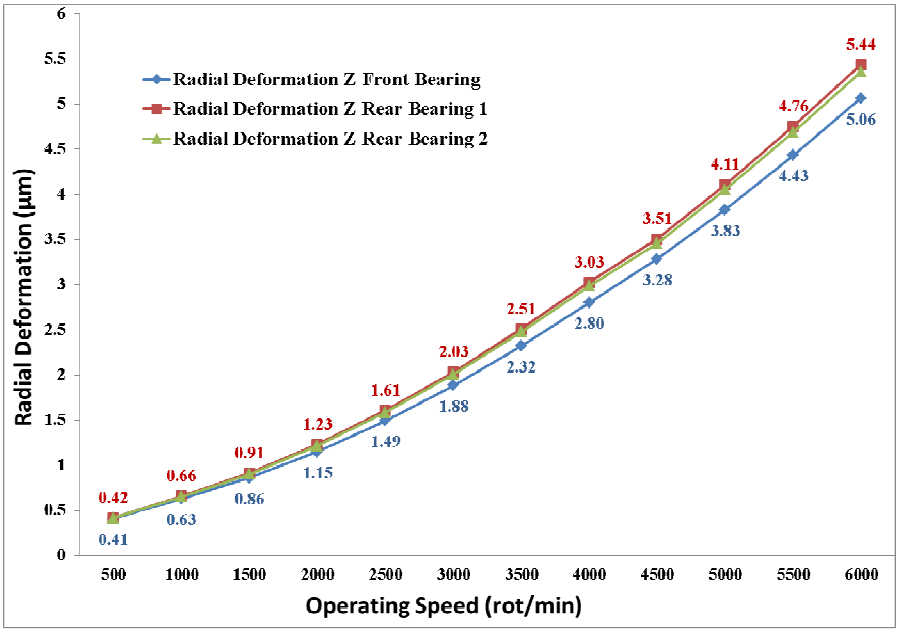

Fig. 14. Radial deformation for *Z* axis for spindle without cooled water.

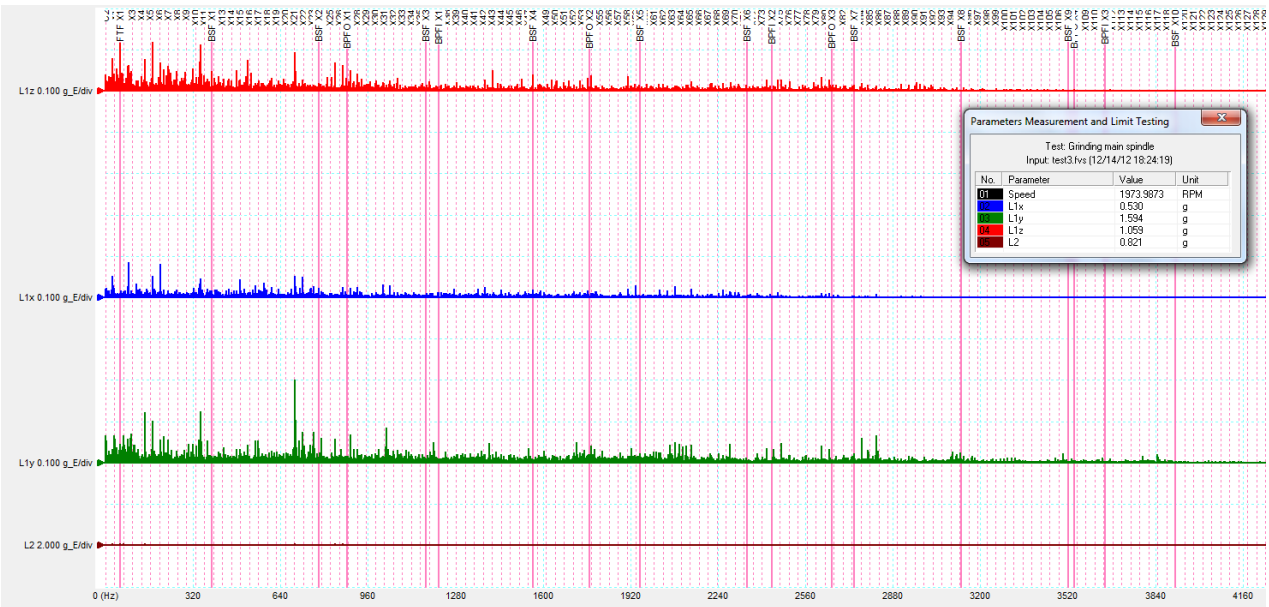

Fig. 15. The bearing fault condition analysis.

[6] S. Jiang, H. Mao, *Investigation of variable optimum pre-load for a machine tool spindle*, International Journal of Machine Tools & Manufacture, 50 (2010), pp. 19–28.

[7] Xu Min, Jiang Shuyun, Ying Cai, *An improved thermal model for machine tool bearings*, International Journal of Machine Tools and Manufacture, 47 (2007), pp. 53–62.

[8] E. Udup, C.-F. Bisu, M. Zapciu, *Numerical Model for Thermo-Mechanical Spindle Behaviour*, Advances in Production, Automation and Transportation Systems, 48 (2013), pp. 259–264.

[9] www. fag.de.

[10] www.basco.com.

[11] www.skf.com.

[12] C.F.Bisu, M. Zapciu, O. Cahuc, A. Gérard and M. Anica, *Envelope dynamic analysis: a new approach for milling process monitoring*, The International Journal of Advanced Manufacturing Technology, Vol.62, Issue 5–8, 2012, pp. 471–486.